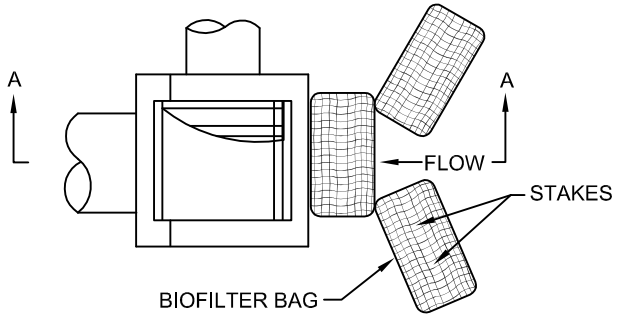

PLAN

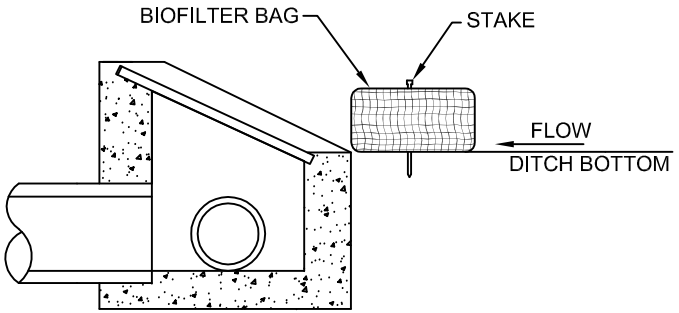

SECTION A-A

DITCH INLET

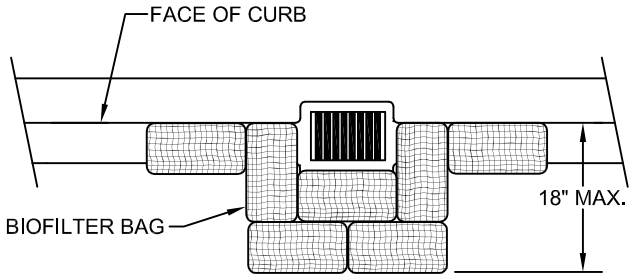

PLAN
CATCH BASIN

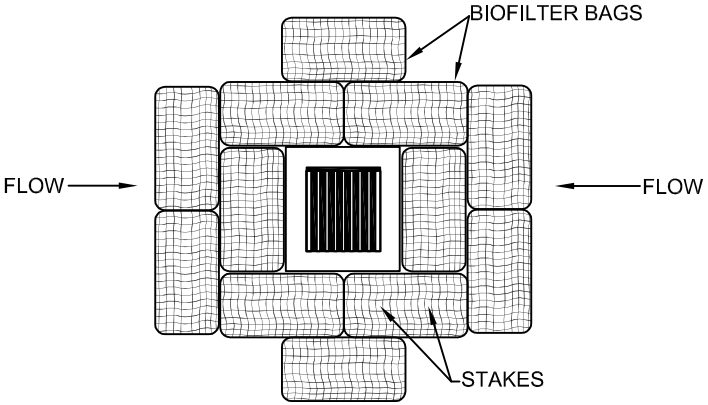

AREA DRAIN

NOTES:

1. USE 2 STAKES PER BAG. STAKES MAY BE OMITTED IF BAGS ARE PLACED ON PAVEMENT SURFACE.
2. OVERLAP ALL BAG JOINTS SIX INCHES.
3. BAGS ON PAVEMENT SHALL BE SECURED TO PREVENT MOVEMENT DURRING RAIN EVENTS.

Kelso Longview
Cities Working Together

INLET PROTECTION BIOFILTER BAGS

STANDARD PLAN: **EC - 120**

DATE: **FEB. 2007**

CITY ENGINEER APPROVAL:

Longview: **C.B.**

Kelso: **S.Z.**