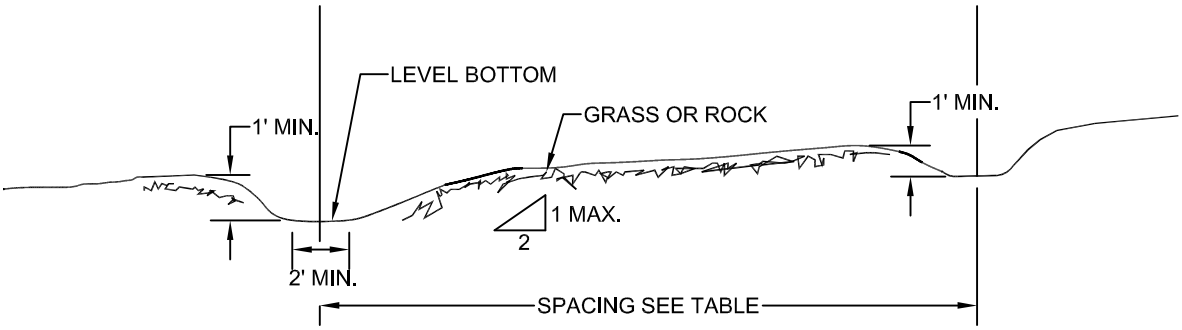

MAXIMUM 5 PERCENT GRADE ALONG SWALE, WITH POSITIVE DRAINAGE TO A SUITABLE OUTLET. (SUCH AS A SEDIMENTATION POND.)

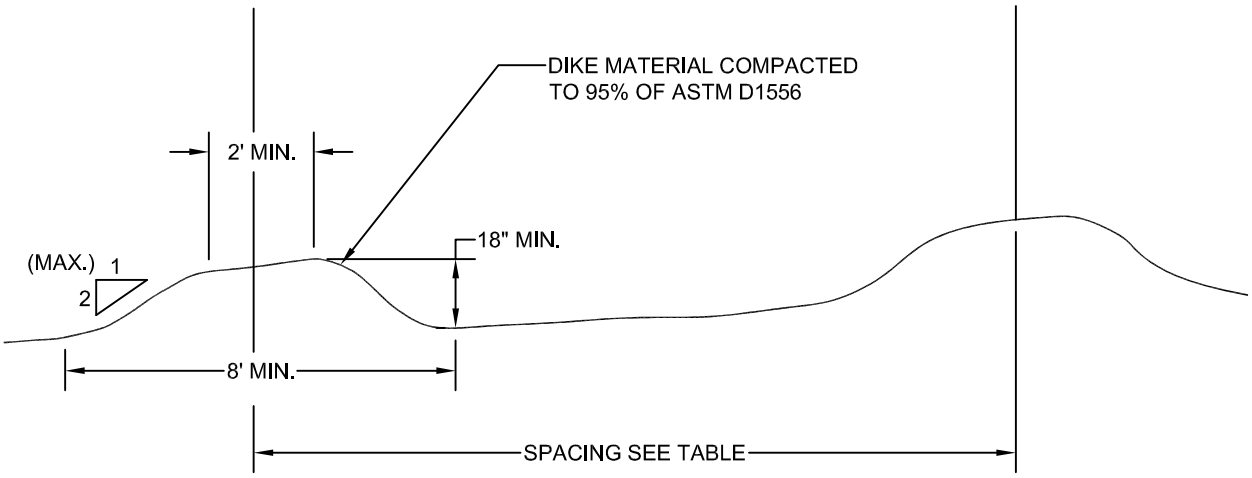

SLOPE	SPACING (FT.)*
< 5%	300
5% - 10%	200
10% - 40%	100

* SPACING ALONG SLOPE CONTOUR

Kelso Longview
Cities Working Together

INTERCEPTOR SWALES AND DIKES

STANDARD PLAN: **EC - 080**

DATE: **FEB. 2007**

CITY ENGINEER APPROVAL:

Longview: **C.B.**

Kelso: **S.Z.**