BROOKS NO. 38-TF
STEEL TRAFFIC COVER FLUSH

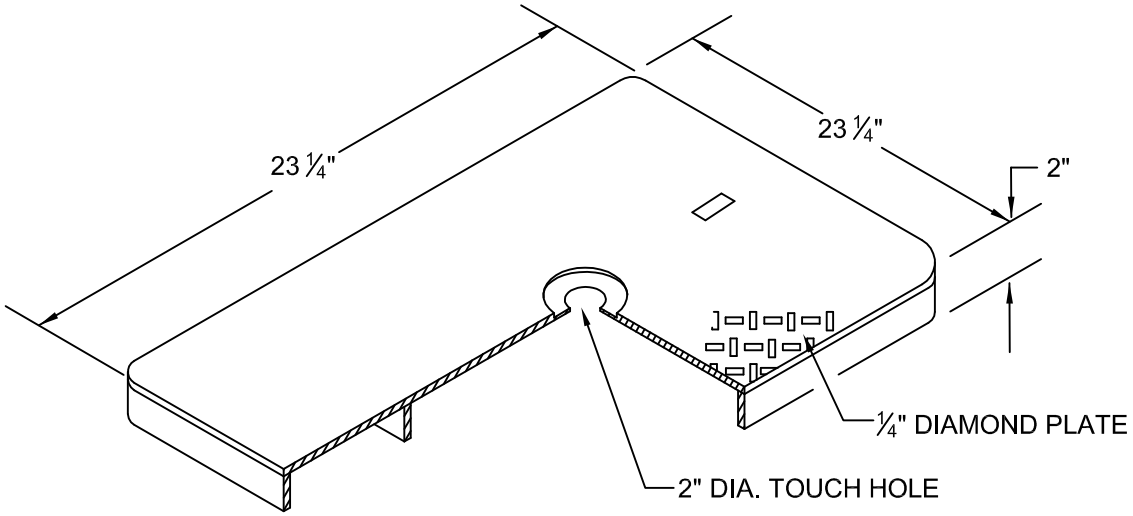

BROOKS NO. 38 MB
BODY

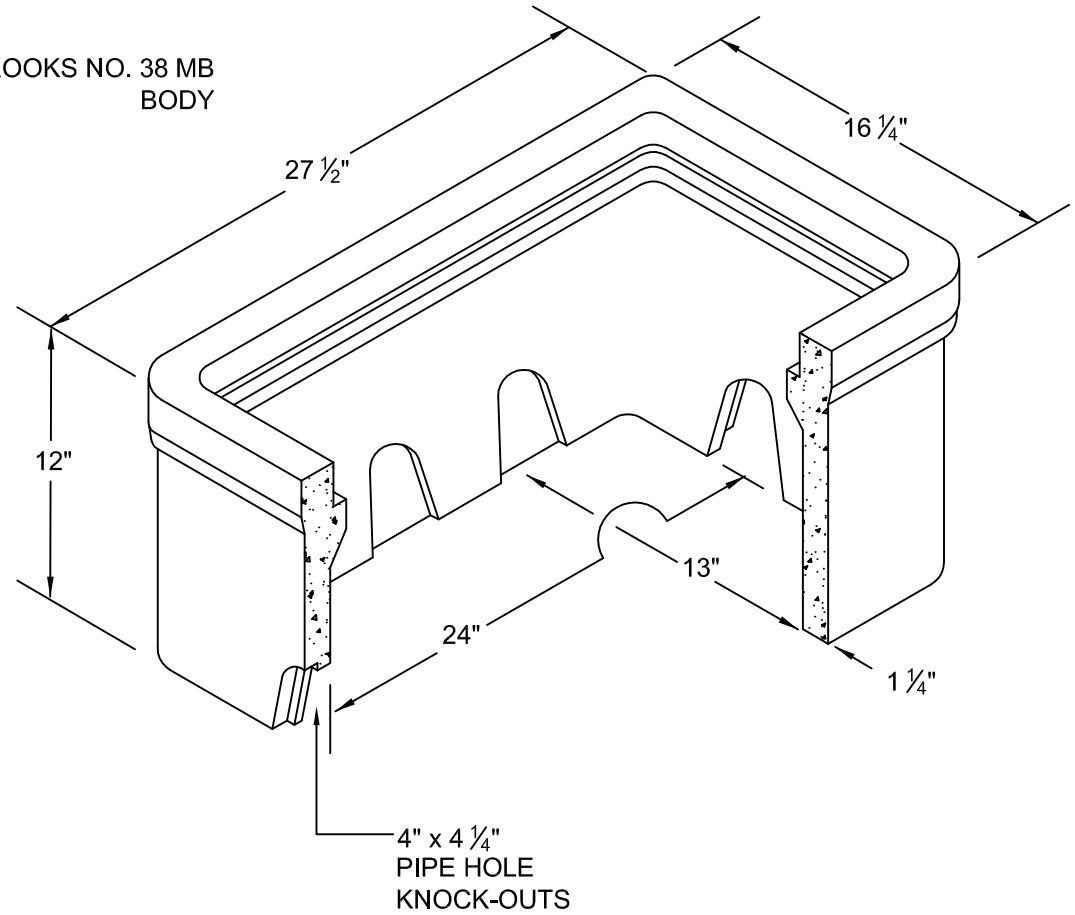

Kelso Longview
Cities Working Together

TRAFFIC COVER & BOX, TOUCH & READ APPLICATION - 1" METERS

STANDARD PLAN: **W - 110**	CITY ENGINEER APPROVAL:
	Longview: **C.B.**
DATE: **FEB. 2007**	Kelso: **S.Z.**