Kelso Longview
Cities Working Together

WATER SERVICE CONNECTION

STANDARD PLAN: **W - 010**

DATE: **FEB. 2007**

CITY ENGINEER APPROVAL:

Longview: **C.B.**

Kelso: **S.Z.**

METER TO BE PLUMB AND SET ON A HORIZONTAL PLANE
METER TO BE CENTERED EACH WAY INSIDE METER BOX

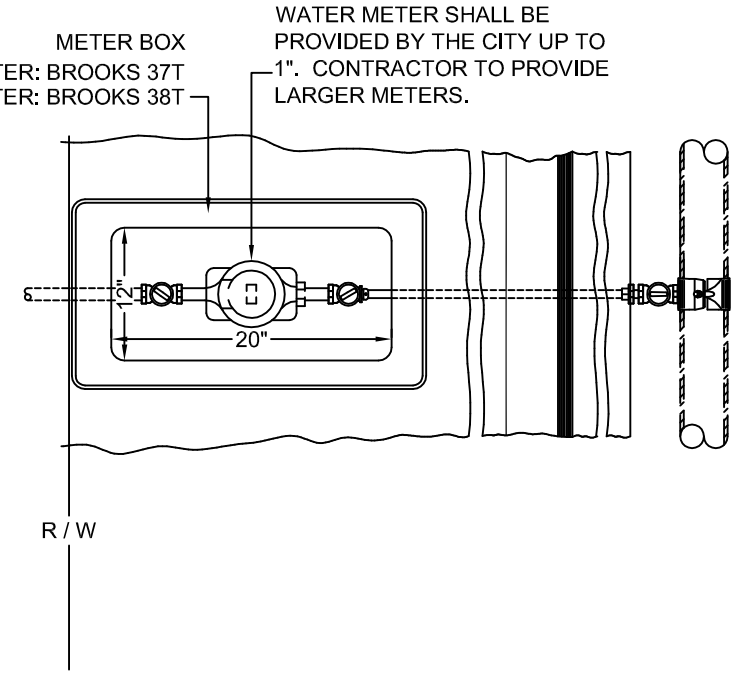

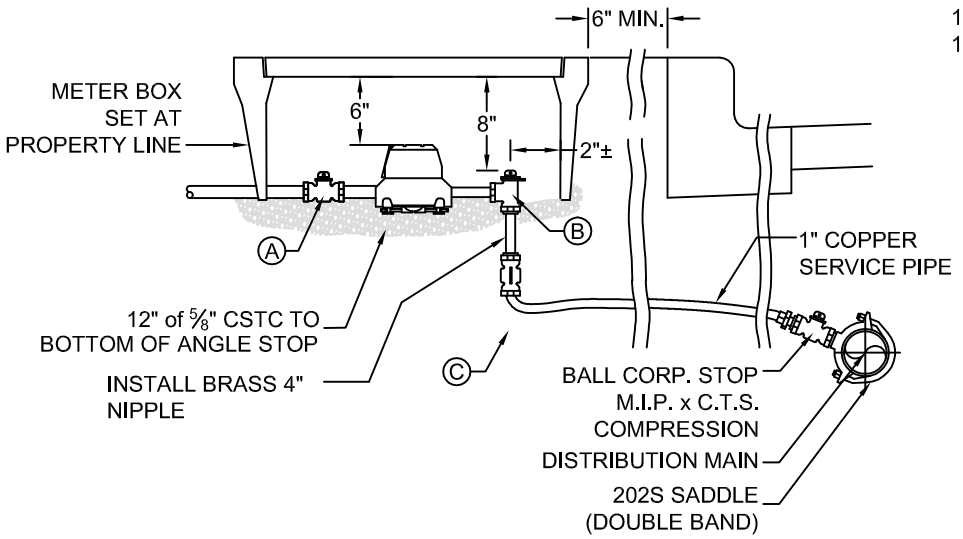

NOTES:

1. CLEARANCES:
   MIN. 5' FROM EDGE OF DRIVEWAY - NO METERS IN DRIVEWAY SECTION
   MIN. 10' FROM TREES
   MIN. 5' FROM OTHER UTILITIES, EXCEPT SEWER @ 10'
   MIN. DEPTH AT RIGHT OF WAY IS 36"
   MIN. DEPTH ON CUSTOMER SIDE IS 18"
2. CTS = COMPRESSION ALL BRASS & COPPER - NO GALVANIZED OR PLASTIC.
3. THE SERVICE LINE SHALL BE CONTINUOUS WITHOUT COUPLINGS BETWEEN THE CORPORATION STOP AND CURB STOP VALVE UNLESS APPROVED BY THE ENGINEER.
4. NO DIRECT TAPS ALLOWED.
5. METER LOCATION TO BE DETERMINED BY THE CITY.
6. SADDLES SHALL BE DOUBLE BAND DUCTILE IRON, BRONZE, STAINLESS STEEL, OR BAND-TYPE WITH I.P. STANDARD TAPPING.
7. BALL CORPORATION STOPS FOR USE WITH SADDLES SHALL BE OF BRONZE ALLOY WITH INLET I.P. STANDARD THREAD AND OUTLET THREST COMPATIBLE WITH CONNECTION PIPING, WITH NO SPECIAL ADAPTERS.
8. MIN. 1" SERVICE PIPE SHALL BE A MINIMUM OF 1" TYPE K COPPER TUBING.
9. COMPRESSION COUPLING FOR USE IN CONNECTING PLAIN END WATER SERVICE PIPES SHALL BE APPLICABLE FOR THE TYPE OF PIPE BEING COUPLED. COMPRESSION COUPLINGS SHALL HAVE ARMORED GASKETS WHEN DIS-SIMILAR METAL PIPES ARE BEING JOINED.
10. WATER METERS SHALL NOT BE PLACED IN SIDEWALK.
11. CORPORATION STOPS AND COUPLINGS SHALL BE OF THE FOLLOWING MANUFACTURER BRANDS AND BE COMPRESSION DESIGN.
    MUELLER
    McDONALD
    FORD

VALVE	¾" METER	1" METER
A	¾" BALL VALVE - FEMALE I.P. x METER	1" BALL VALVE - FEMALE I.P. x METER
B	1" X ¾" ANGLE BALL VALVE STOP IP x METER	1" ANGLE BALL VALVE STOP IP x METER
C	1" BALL VALVE - F.I.P. x CTS COMPRESSION WITH LOCKING OPERATING NUT. (NO ADAPTERS ALLOWED) BALL VALVE TO BE INSTALLED AT 90° TO ANGLE STOP	