ABANDON AT MANHOLE

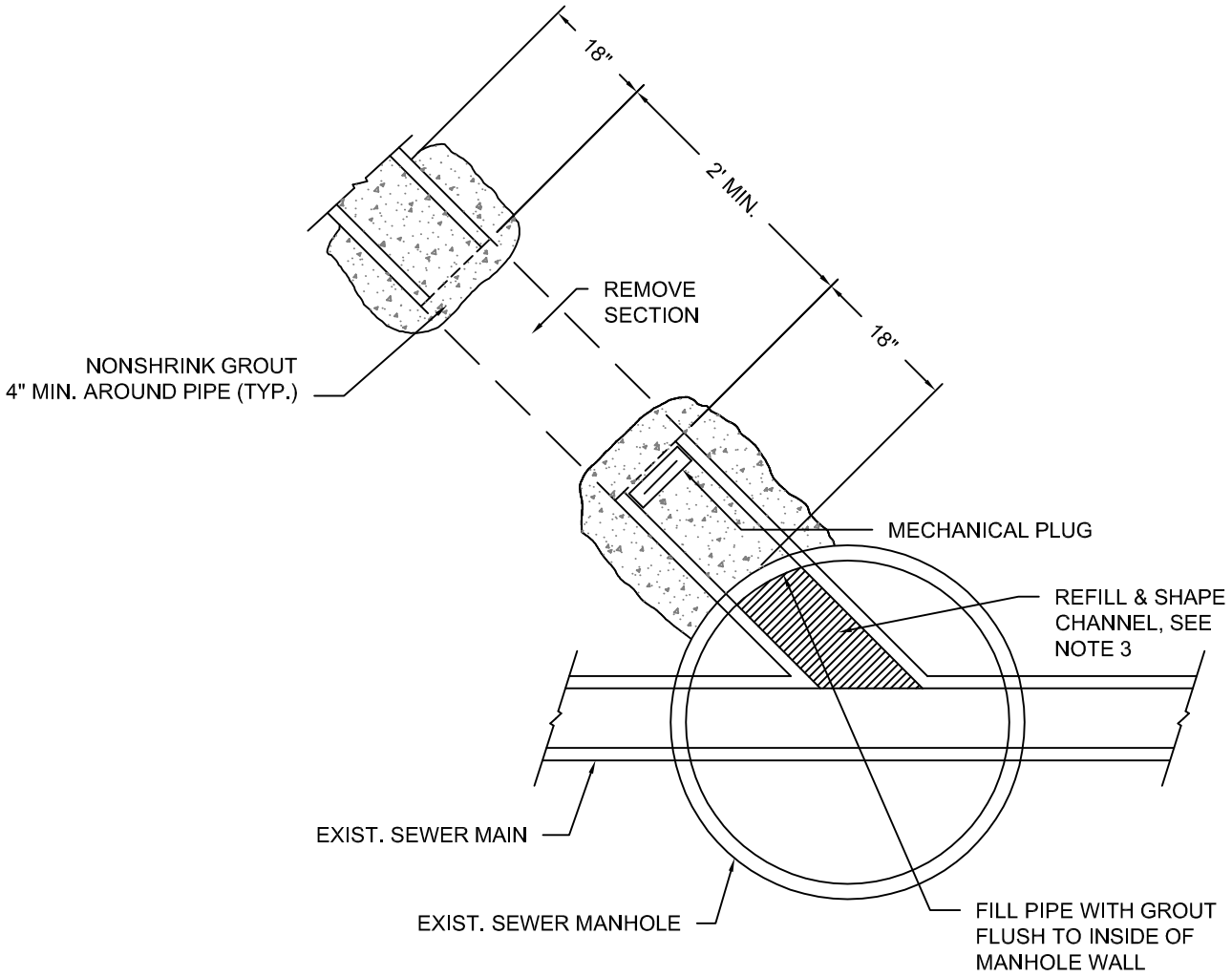

NOTES:

1. FOR SEWERS 15" AND SMALLER DIAMETER, DISCONNECT SEWERS AS SHOWN, INSERT MECHANICAL PLUGS, AND PLACE GROUT.

2. FOR SEWERS 18" AND LARGER DIAMETER SAME PROCEDURE AS NOTE 1 EXCEPT MASONRY BULKHEAD MAY BE SUBSTITUTED FOR MECHANICAL PLUG.

3. RESHAPE AND FILL EXISTING CHANNEL AS NECESSARY TO PROVIDE SMOOTH CONTOUR BETWEEN INCOMING AND OUTGOING PIPES.

Kelso Longview Cities Working Together

ABANDONMENT OF PIPE AT MANHOLE	
STANDARD PLAN: **SS - 190**	CITY ENGINEER APPROVAL: Longview: **C.B.**
DATE: **FEB. 2007**	Kelso: **S.Z.**