SANITARY SEWER MANHOLES

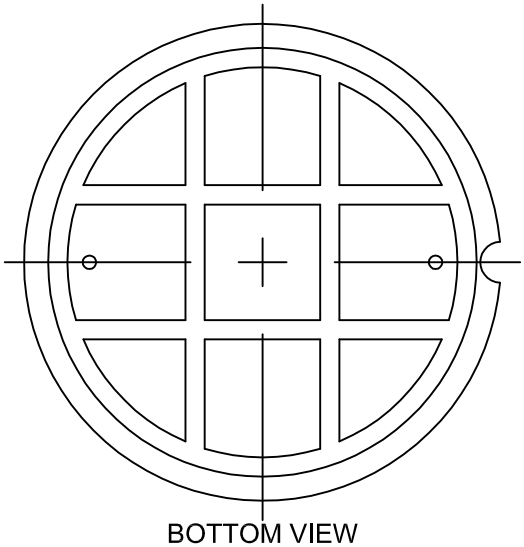

BOTTOM VIEW

STORM DRAIN MANHOLES

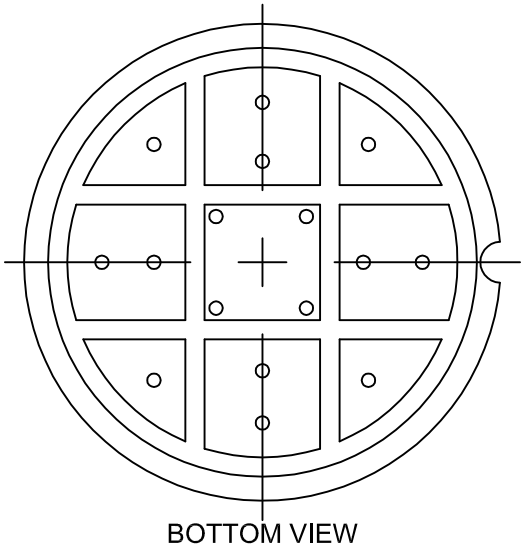

BOTTOM VIEW

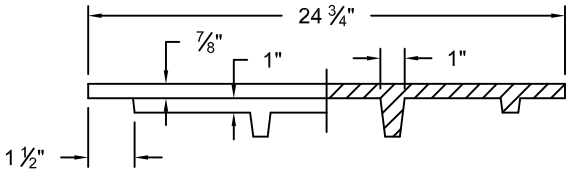

SECTION A-A

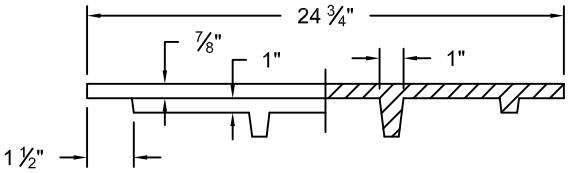

SECTION A-A

MACHINE TO A TRUE
BEARING ALL AROUND

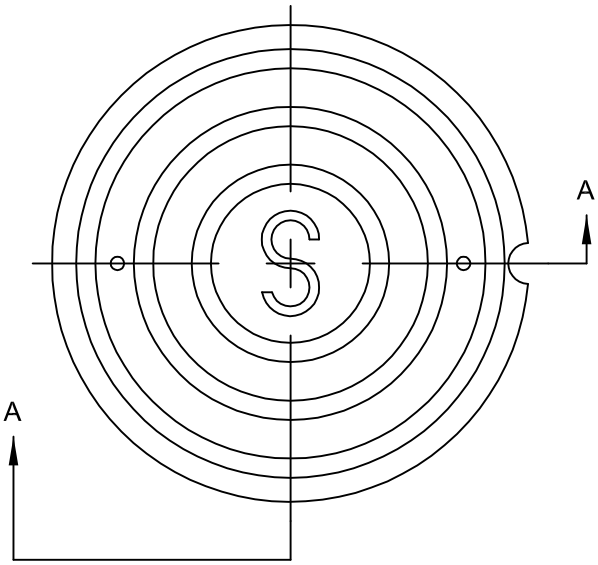

TOP VIEW

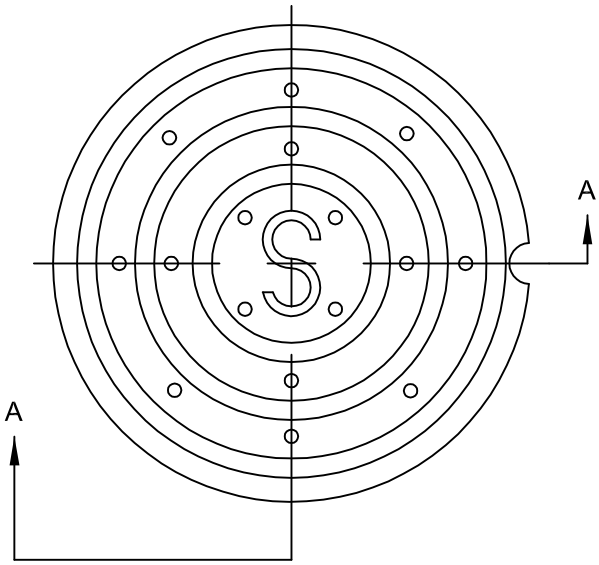

TOP VIEW

CAST IRON OR DUCTILE
W/ H20 LOAD RATING
APPROVED BY CITY ENGINEER

Kelso Longview
Cities Working Together

24 3/4" DIAMETER MANHOLE COVER

STANDARD PLAN:	CITY ENGINEER APPROVAL:
SS - 120	Longview: **C.B.**
DATE: **FEB. 2007**	Kelso: **S.Z.**