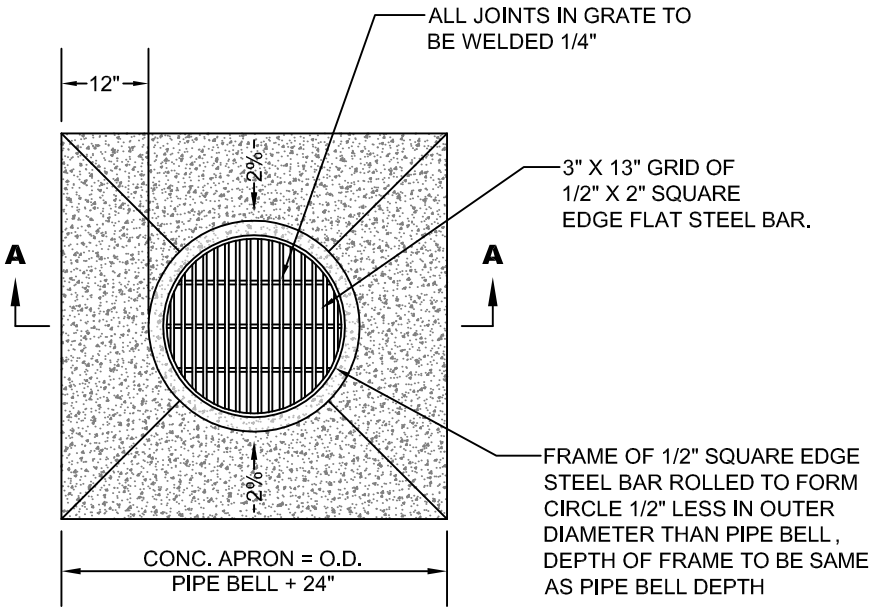

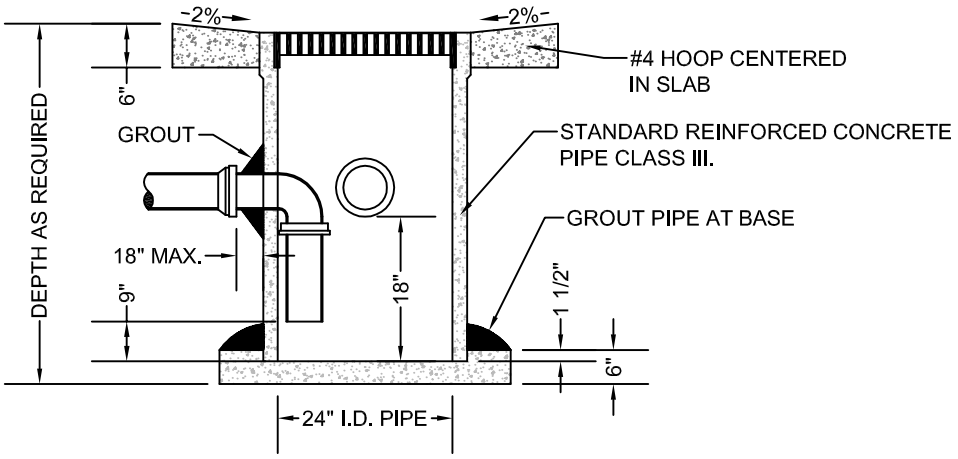

SECTION A-A

NOTES

1. GRATES SHALL BE CONSTRUCTED FOR BICYCLE SAFETY.
2. PRECAST CONCRETE CATCH BASINS MAY BE USED WHEN SPECIFIED OR APPROVED. PLASTIC BASINS MAY BE USED WHEN APPROVED.
3. NOT FOR USE IN VEHICULAR TRAFFIC AREAS.
4. ANCHOR VERTICAL LEG OF INLET PIPE IF NOT A GLUED JOINT.

Kelso Longview Cities Working Together

AREA DRAINAGE BASIN OR FIELD INLET

STANDARD PLAN: SD - 090	CITY ENGINEER APPROVAL:
	Longview: **C.B.**
DATE: **FEB. 2007**	Kelso: **S.Z.**