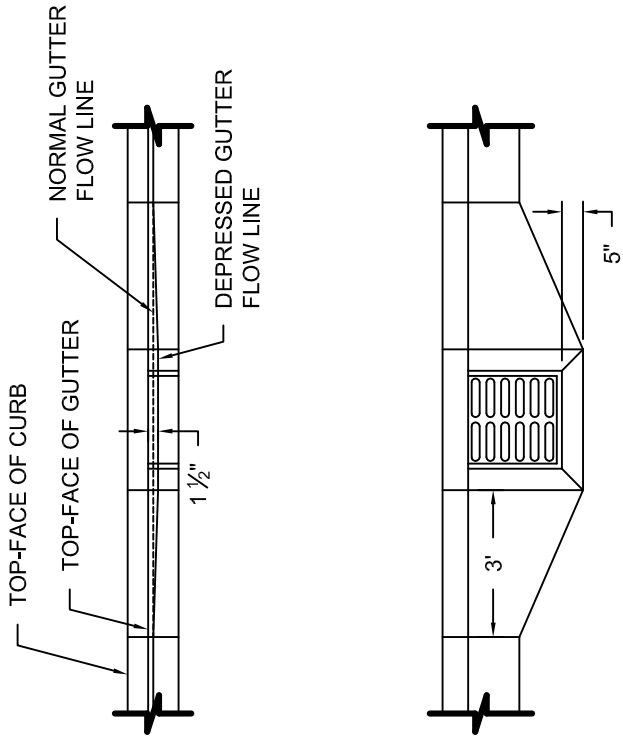

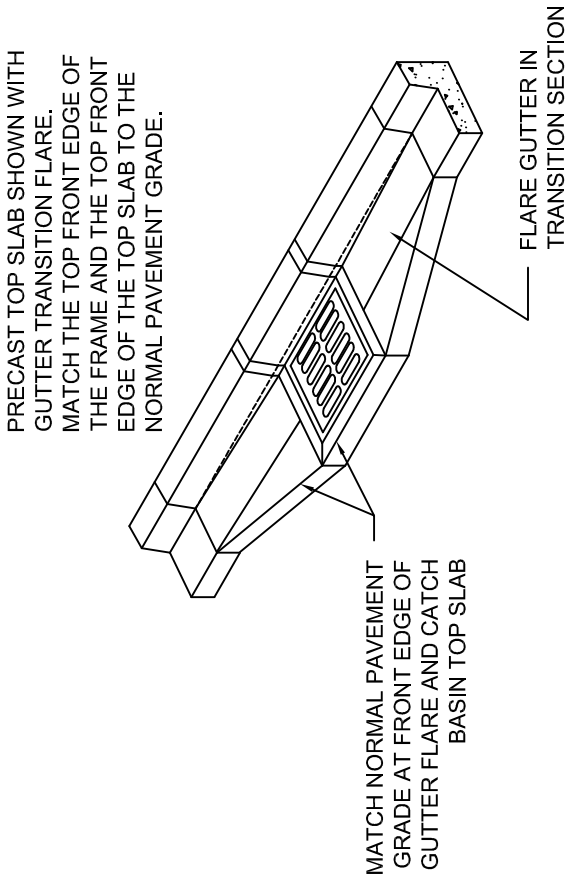

Kelso Longview
Cities Working Together

GUTTER TRANSITION SECTION

STANDARD PLAN:	CITY ENGINEER APPROVAL:
SD - 050	Longview: **C.B.**
DATE: **FEB. 2007**	Kelso: **S.Z.**